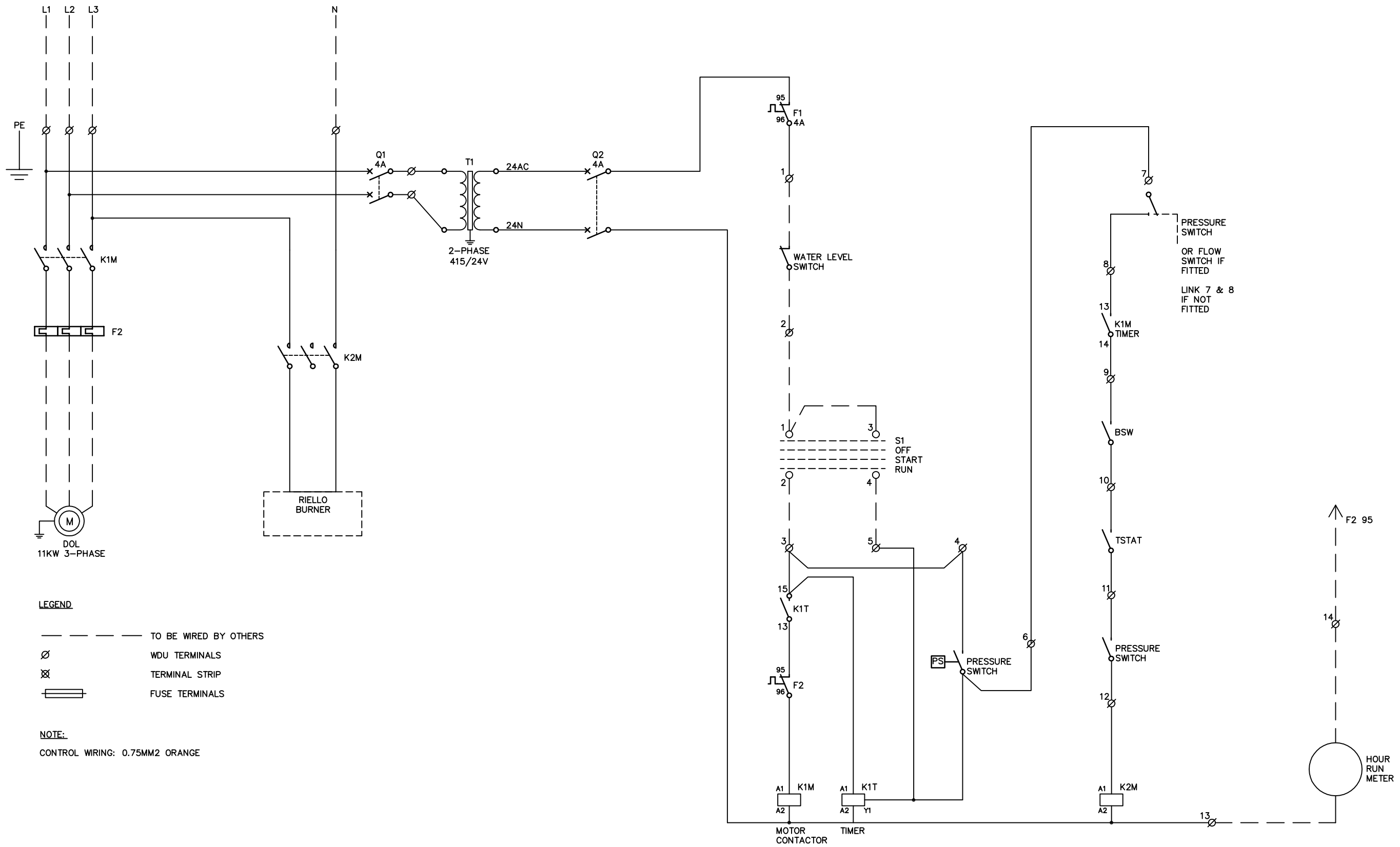

LEGEND

— — — —	TO BE WIRED BY OTHERS
⌀	WDU TERMINALS
⊠	TERMINAL STRIP
▭	FUSE TERMINALS

NOTE:

CONTROL WIRING: 0.75MM2 ORANGE

REV	BY	DATE	DESCRIPTION	CHECKED	APPROVED	DATE
A	CV	21.03.18	AS BUILT	GT	GT	21.03.18

NOTES:

JET BLASTER
UN 3000/30
CONTROL PANEL
PAGE 1 OF 1

© THIS DRAWING IS COPYRIGHT OF AQUEOUS SOLUTIONS AND MUST NOT BE COPIED OR REPRODUCED IN ANYWAY WITHOUT PRIOR WRITTEN CONSENT.

APPROVALS
DESIGNED
DRAWN
CHECKED
ENG. APPR.
PROJ. APPR.
IF IN DOUBT, PLEASE ASK.

CLIENT: XXXX
TITLE:
JETBLASTER HIGH PRESSURE WATER BLASTERS

SCALE	JOB NO.	DRAWING NO.	SHEET SIZE	REV
NTS.	256	3SB-43/AUS 10-SP/02-068-3000	A3	0